SAMURAI

321B Nitro Engine

Instruction Manual

INSTRUCTION MANUAL

It is important that before attempting to operate your engine that you read, understand and strictly follow the outlined guidelines in the "Safety Instructions, Warnings and Notes" section on pages 1-3 of this manual.

- Study the information provided in this manual in order to become familiar with the controls and features of the engine.
- Keep these instructions in a safe place so that you may refer to them when needed.
- It is recommended that you keep the instructions for the vehicle, radio/transmitter equipment, etc. accessible at the same time so that you may refer to them when needed.

CONTENTS

1-3 Safety Instructions, Warnings & Notes

4-5 Engine Construction & Notes When Applying the Starter Box

6-7 About the Engine & Standard Included Accessories

8-10 Required Items & Basic Engine Parts

11-12 Carburetor Controls & Glow Plug

13-15 Installation of the Standard Accessories & Engine Installation

16-20 Starting & Breaking-In the Engine

21-23 Final Adjustment

24-25 Care & Maintenance

26-28 Troubleshooting

29-30 Engine Exploded View & Parts List

31-32 Carburetor Exploded View & Parts List

33 Engine Accessories

34 3D Drawing & Specifications

SAFETY INSTRUCTIONS, WARNINGS & NOTES

Remember, this engine is not a "toy"! This is an internal combustion engine that has the potential to damage property, as well as harm you or others if misused. As the owner, you alone are responsible for the safe operation of this engine. Act with discretion and care at all times. If the ownership of this engine is transferred to another person, it is the responsibility of the original owner to provide this manual to the new owner.

The following warnings apply to **ALL MODEL ENGINES** and are grouped under two headings according to the degree of danger and/or damage which could occur due to misuse or neglect of this product.

⚠ WARNINGS	⚠ NOTES
These cover events which could cause serious, and in extreme circumstances, even fatal injury.	These cover the many other and generally less obvious sources of danger, but which under certain circumstances may also cause damage or injury.

⚠ WARNINGS

Model engine fuel is poisonous. Do not allow it to come into contact with the eyes or mouth. Always store fuel in a clearly marked container and out of the reach of children.

Model engine fuel is highly flammable. Keep it away from open flames, excessive heat, sources of sparks, or anything else that could ignite it. Do not smoke or allow anyone else to smoke near it.

Model engine exhaust, like automobile engine exhaust, contains deadly carbon-monoxide. Never operate your engine in an enclosed space. Run your engine only in an open, well ventilated area.

Model engines generate considerable heat. Do not touch any part of your engine until it has cooled. Contact with the exhaust system or cylinder head may result in a serious burn.

⚠ NOTES

- This engine is intended for use in model cars. Do not attempt to use it for any other purpose.
- Mount the engine in your model securely. Always follow the manufacturer recommendations, using the appropriate screws and locknuts.
- Install an effective throttle return device. This will close the carburetor in the event that battery power is lost during operation.
- Install an effective silencer (tuned pipe). Frequent close exposure to a noisy exhaust (especially in the case of more powerful high speed engines) may eventually impair your hearing and such noise is also likely to cause annoyance to others.
- Eye protection is highly recommended.
- Ensure that the linkage to the throttle arm is secure.
- As a safety precaution, maintain a 20 foot (6 meters) distance between your model and all bystanders (especially small children).

⚠ WARNING

WARNING: This product contains chemicals known to the State of California to cause cancer, birth defects or other reproductive harm.

THIS PRODUCT IS NOT A TOY! NOT FOR CHILDREN UNDER 14 YEARS. For proper opertation and to avoid risk of damage and injury, read and follow all instructions before operating this product. Failure to comply may result in excessive heat, fire, property damage and serious injury.

⚠ NOTES

- Before starting the engine, verify that all fasteners, especially those at joints and moving parts (such as the throttle arm) are tight and secure. Loose fasteners are often the source of catastrophic problems and could lead to injury or property damage.

- To stop the engine during normal operation, reduce the throttle to neutral, flip the car over and push a blunt rubber object against the flywheel.

- To stop the engine in the event of an emergency, use a blunt rubber object to plug the exhaust and flood the engine (recommended), or cut off the fuel supply by pinching the fuel delivery line from the fuel tank. In the event of an emergency DO NOT attempt to stop the engine at the flywheel.

- **WARNING!** Immediately after a glow type engine has been shut off, while the engine is still warm, conditions exist that make it possible for the engine to abruptly re-start if the piston is rotated through the compression point (top dead center: TDC), WITHOUT the glow plug igniter being connected.

ENGINE CONSTRUCTION

This engine uses a chrome plated brass sleeve with a tapered cylinder wall. When the engine is cold, the piston will feel tight when rotated through the top of its stroke, or Top Dead Center (TDC). This is normal. The cylinder will expand and will achieve correct clearance once normal operating temperature has been reached.

NOTE: When this engine is new, DO NOT try to turn the crankshaft and rotate the piston through TDC, as this will jam the piston in the cylinder.

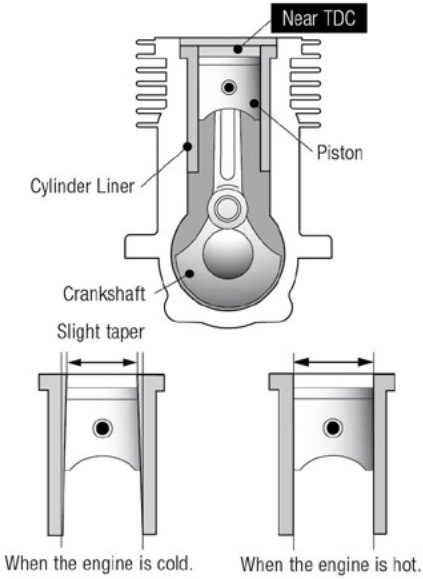

NOTES WHEN APPLYING THE STARTER BOX

DO NOT over prime the engine. This could cause a hydraulic lock and damage the engine when the starter is applied.

- If over-primed, remove the glow plug, close the high speed needle valve, cover the head with a rag and apply the starter to pump out excess fuel. The rag will help to prevent fuel from coming into contact with your eyes.

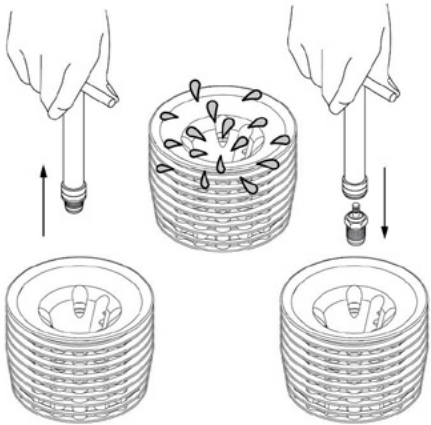

ABOUT THE ENGINE

The ProTek R/C Samurai 321B is a 3.5cc high performance short-stroke nitro engine produced and assembled in Japan by one of the most highly respected model engine manufacturers in the industry. Designed for off-road radio-controlled competition racing, the engine is ideal for 1/8 Scale Buggy and Truggy use while featuring a turbo glow plug and slide carburetor. With its easy-to-tune and consistently stable operating characteristics, the Samurai 321B is the ideal engine of choice for the racer seeking a reliable engine with a smooth power band and great runtime.

NOTE: The carburetor is only lightly fit into the engine and is not fully installed. This allows the user to adjust the angle and make necessary adjustments to suit their specific application.

STANDARD INCLUDED ACCESSORIES

- ProTek P3 - Ultra Hot Turbo Glow Plug (PTK-2542) (1)

- 0.1mm Cylinder Head Shim (PTK-2509) (1)

- High Temp Exhaust Gasket (PTK-2528) (1)

- 7mm "Elliptical" Carburetor Restrictor (PTK-2524) (1)
  8mm "Elliptical" Carburetor Restrictor (PTK-2526) (1)

- 3mm, 16mm & 17mm Dust Cap (PTK-2527) (1)

REQUIRED ITEMS & BASIC ENGINE PARTS

The following items are required to operate the engine.

FUEL

The user should only use high quality fuel for two stroke glow type engines that contains 10-30% nitromethane. Fuel with 20% nitro content is recommended for break in. Then, change to a fuel with a higher nitro content later if desired. When the brand of fuel is changed, or the nitro content is increased, it is advisable to repeat a short break in procedure referred to in the **BREAKING IN** section. Please note that high nitro content fuels produce more power at the expense of reduced engine life. This will also shorten the life of the glow plug element.

⚠ WARNING

Model engine fuel is poisonous. Do not allow it to come into contact with the eyes or mouth. Always store it in a clearly marked container and out of the reach of children. Wash hands after use.

Model engine fuel is highly flammable. Keep away from open flames, excessive heat, sparks, or anything else that could ignite it. Do not smoke or allow anyone else to smoke near it.

FUEL FILTER

Install the filter in the fuel line between the fuel tank and the carburetor to prevent dust from entering the carburetor.

GLOW PLUG IGNITER

Commercially available, a glow plug igniter is a handy tool that uses an integrated battery to heat the glow plug.
Recommended: PTK-7605 - ProTek R/C "SureStart" Rechargeable Glow Ignitor w/Charger (2100mAh NiMH)

STARTER BOX

Used to start the engine.
Recommended: PTK-4500 - ProTek R/C SureStart 1/8 Off-Road Starter Box

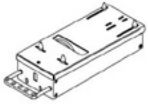

STARTER BOX BATTERIES

Use the battery type that is recommended by the starter box manufacturer. Ensure that the battery is fully charged before use.
Recommended: ECP-LPH-5000-2S30 (x2) - EcoPower 2S Li-Poly Battery Pack

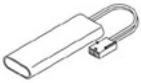

FUEL BOTTLE

Use this to fill the fuel tank.
Recommended: PTK-7600 - ProTek R/C "Fast Fill" Fuel Bottle (500cc) & PTK-7603 - ProTek R/C "Quick Pit" Fuel Gun

SILICONE FUEL LINE

Heatproof silicone tubing suitable for nitro fuel with an approximate 5mm outer diameter and 2mm inner diameter is required to make the connection between the fuel tank and the engine.

TOOLS

HEX SCREWDRIVER

Use for engine installation. 1.5mm, 2mm, 2.5mm, 3mm
Recommended: PTK-8227 - ProTek R/C "TruTorque" Metric Hex Driver Set

SCREWDRIVER

Necessary for carburetor adjustments. No.1, No.2, etc.
Recommended: PTK-8219 - ProTek R/C "TruTorque" Flat Blade Screwdriver (4mm)

LONG SOCKET WRENCH WITH PLUG GRIP

Recommended for easy removal and replacement of the glow plug, this socket wrench incorporates a special internal grip.
Recommended: PTK-8202 - ProTek R/C "TruTorque" 4-in-1 Multi-Wrench

ProTek R/C offers a full line of batteries, chargers, servos and accessories. Visit www.ProTekRC.com for more information.

BASIC ENGINE PARTS

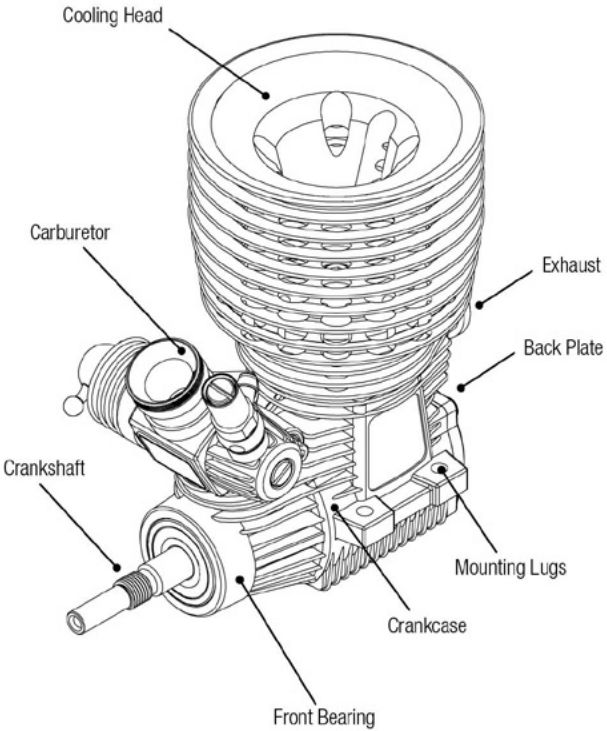

CARBURETOR CONTROLS

The following procedure is recommended for this engine when the ProTek R/C P3, PTK-2060 or PTK-2090 tuned pipe and fuel containing up to 30% nitromethane are used.

HIGH SPEED NEEDLE (NEEDLE VALVE)

Use to adjust the fuel mixture when the throttle is fully open. (*3½ Turns from fully closed)

MID NEEDLE (MIXTURE CONTROL VALVE)

For changing the fuel mixture at mid speed and acceleration. DO NOT rotate the screw more than one turn. (*2¾ turns from fully closed)

LOW SPEED NEEDLE (METERING NEEDLE)

For adjusting the fuel mixture at partial throttle and idle speed to obtain steady idling and smooth acceleration to mid speed. (*5½ turns from fully closed)

IDLE SCREW (THROTTLE STOP SCREW)

For setting the minimum idle speed. This is adjusted at the factory.

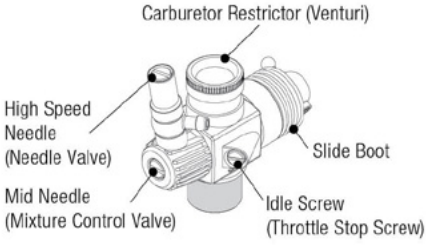

NOTE: We recommend you double check the needle settings prior to beginning the break in process. The settings are set at the factory, but slight readjustment may be necessary to allow for changes in fuel formula, gear ratio or clutch engagement point.

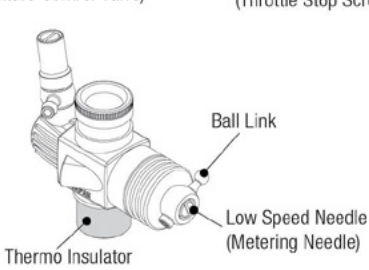

*Factory default settings. When screwing the needles all the way in, the slide must be in the fully open position.

GLOW PLUG

Since the chosen glow plug and fuel type will effect performance and reliability, it will be worthwhile to test with different plugs to find the best plug for your application. We recommend the ProTek R/C P3 plug. Carefully install the plug finger tight before final tightening with the correct size plug wrench.

THE ROLE OF THE GLOW PLUG

With a glow plug engine, ignition is initiated when a 1.5 volt power source is connected to the plug. When the engine is running and the power is disconnected, the heat retained within the combustion chamber remains sufficient to keep the plug filament glowing. This keeps the engine running. Ignition timing is automatic. This means under reduced load and higher RPM, the plug gets hotter and fires the fuel/air charge earlier in the piston stroke; at reduced RPM the plug becomes cooler and ignition is retarded firing the charge later in the stroke.

GLOW PLUG LIFE

In the case of high performance nitro engines, glow plugs must be regarded as expendable items. However, plug life can be extended and engine performance maintained by careful use, i.e.:

- Use a plug suitable for the engine.
- Use fuel containing a moderate percentage of nitromethane, unless more is essential for racing events.
- Do not run the engine too lean and do not leave the igniter battery connected while making needle adjustments.

WHEN TO REPLACE THE GLOW PLUG

Apart from when actually burnt out, a plug may need to be replaced because it no longer delivers its best performance, such as when:

- Filament surface is rough and has turned white.
- Filament coil has become distorted.
- Foreign matter has adhered to filament or plug body has corroded.
- Engine tends to cut out when idling.
- Engine becomes more difficult to start.

INSTALLATION OF THE STANDARD ACCESSORIES

INSTALL THE GLOW PLUG

Insert the included plug into the heatsink head carefully making sure that it is not cross threaded before tightening firmly.

INSTALL THE INCLUDED EXHAUST GASKET.

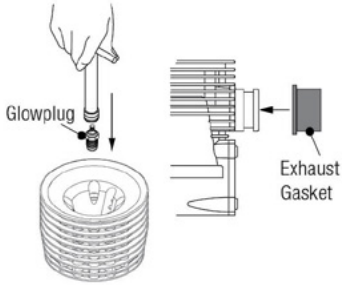

One 0.1mm cylinder head shim and one 0.2mm head shim are installed in the engine when it leaves the factory. An additional 0.1mm head shim is supplied with the engine. You may add it for break in, when you are trying to achieve increased run time at the expense of a loss in power, or if the glow plug tends to burn out due to high temperature and/or high humidity.

INSTALLING THE CARBURETOR REDUCER

Choose the reducer according to the track conditions.

- 7mm Installed from the factory.
- 8mm Included in package.

INSTALLATION OF THE DUST CAP SET

If the engine is going to be stored, install the included exhaust and carburetor dust caps to prevent debris or other foreign matter from getting inside the engine.

INSTALLATION OF THE CARBURETOR

The carburetor is only lightly installed into the intake boss when it leaves the factory. Follow the steps below to complete the installation.

1 Loosen the retainer screw, rotate the carburetor into the position that best suits your application and make sure that it is fully seated into the intake boss, compressing the rubber gasket.

2 Gently turn the retainer screw until it stops, then tighten it an additional 120° - 180°. Do not over tighten the screw as this will damage the carburetor body.

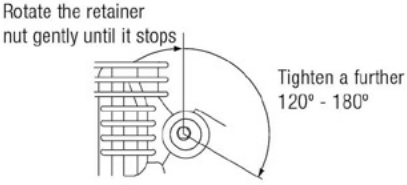

NOTE: Be careful not to damage the o-rings when removing the carburetor retainer from the engine. Do not push the part in or it could damage the o-rings.

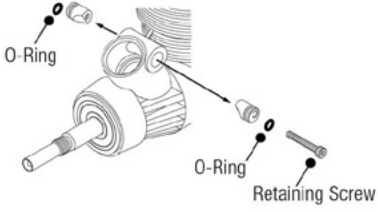

ENGINE INSTALLATION

Make sure that the vehicles engine mount surfaces are level, and on the same plane. Poor installation may cause distortion of the crankcase, bearings, etc, resulting in erratic performance and permanent damage.

The recommended screws for securing the engine are Allen head, hexagon socket type 3mm or 4-40 steel screws.

If existing holes in the engine mount do not align perfectly with the engine mounting lugs in the crankcase, enlarge the holes in the lugs slightly with a needle file so that the screws are perfectly aligned with the engine mount holes.

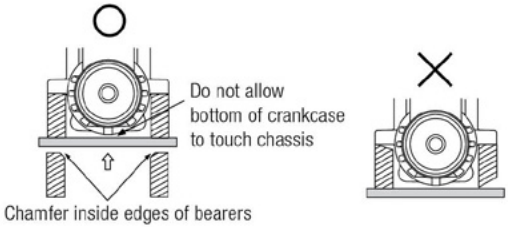

- Do not allow the bottom of the crankcase to touch the chassis.
- If needed, chamfer the inside edges of the engine mounts for clearance.

STARTING & BREAKING-IN THE ENGINE

WHILE OPERATING

- **DO NOT** drive the model on a public street! This can cause serious accidents, personal injuries and/or property damage.
- **DO NOT** operate near pedestrians or small children.
- **DO NOT** operate in small or confined areas.
- **DO NOT** operate in areas where loud noises can disturb others, such as residential areas.

⚠ WARNING

Before starting the engine, make sure all fasteners are tight, especially those at joints and moving parts, such as the throttle arm. Loose fasteners are often the source of damaged components and could lead to injury and/or property damage.

BREAKING-IN

The break-in procedure is performed to prepare the engine for running conditions (fuel, RPM, engine temperature, etc). Excessively rich and prolonged low speed running should be avoided. Running at low speeds and low temperatures for prolonged periods of time will have a negative effect on the performance and lifespan of your engine.

PRESSURIZED FUEL SYSTEM

- The constant changes in vehicle attitude that occur in off-road conditions, combined with the distance between the fuel tank and carburetor can negatively affect performance. Because of this, it is recommended that only a muffler with a pressurized fuel feed system be used.
- Never run your vehicle without installing the air filter. The dust and dirt that will be drawn into the engine will cause permanent damage to the components.

The following procedure is recommended for this engine when the ProTek R/C P3, PTK-2060 or PTK-2090 tuned pipe and fuel containing up to 30% nitromethane are used.

- Identify and note the flywheel position when the piston is at Bottom Dead Center (BDC).
- Fill the tank completely with fuel.
- Check the glow plug and verify that the filament glows bright red when the igniter is attached.

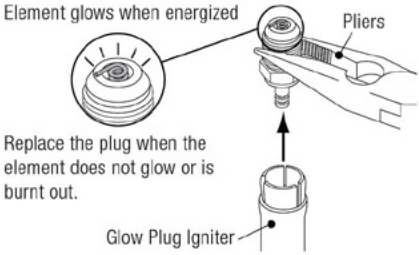

The carburetor is set at the factory as shown in the images below. Double check the settings before you start the engine.

- The high speed needle (needle valve) is set approximately 3-turns open from the fully closed position.

Turn the high speed needle clockwise until it stops. This is the fully closed position. Do not force it to turn further.

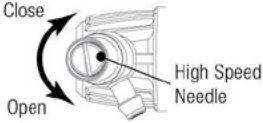

- Idle gap is set approximately 0.5mm open.

Approx. 0.5mm open factory setting with the restrictor removed.

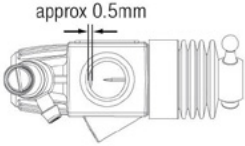

- The opening should be approximately 0.5mm with the restrictor removed.

- Low speed needle (metering needle) and mid needle (mixture control valve) are set at the basic position (refer to P23).

- Switch the transmitter on and make sure that the linkage moves correctly.

- Pre-heat the engine to approximately 150°-160°F (66°-71°C) using an engine heater or heat gun before starting.

- Plug the stinger on the exhaust and turn the engine over with the starter box to draw fuel into the engine.

- Now connect the glow plug igniter to heat the plug and start the engine.

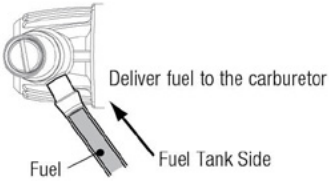

If the engine does not start, or stalls out right after started, try the following:

- Set the high speed needle approximately 2.5 turns open from the fully closed position. Do not force the high speed needle to turn beyond a lightly closed position.

- Set the throttle opening a little wider than the factory setting by adjusting the idle screw (throttle stop screw).

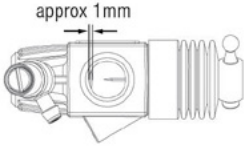

- When the engine starts, warm it up using smooth throttle inputs, increasing the rpm to medium speed and back to a fast idle in the neutral position with the mixture set rich. Leave the glow plug igniter connected, and keep the wheels of the car off the ground. The slightly rich mixture will provide adequate lubrication and cooling indicated by profuse exhaust smoke.

NOTE: It is incredibly important to set the throttle to the neutral position before starting the engine. If the engine is allowed to run with the throttle open too far under "no load" conditions (i.e. with the driving wheels not in contact with the ground), the engine may overheat and could be damaged.

HEAT CYCLE BREAK-IN METHOD

The purpose of this break in method is to heat cycle the engine without subjecting the components to the stress that comes from breaking-in an engine that is overly rich and cold. You want the engine to reach temperatures in the low 200°F (93°C) range to reduce stress on the components.

Pre-heat the engine to approximately 150°-160°F (66°-71°C) using an engine heater or heat gun before starting for the first time and pre-heat the engine each time you start it during the break-in process. Additionally, if you have trouble keeping the temperature in the 200°F range while the engine is running, it may be beneficial to wrap the cooling head with an insulator of some type, such as tin foil, or an old sock. This will help the engine retain heat and reach 200°F while it is tuned with the rich needle settings.

After a brief warm up period, disconnect the glow plug igniter and run the car on the track for approximately 3 minutes at low speed. If the engine stalls, increase the amount of throttle being applied slightly. If the engine stalls because it is excessively rich, close the needle valve 30° and try again. When the 3 minutes are up, shut the engine down, verify that the piston is at the bottom of the stroke (Bottom Dead Center - BDC) and let it cool completely. Once the engine has cooled down, close the needle valve 30°, start it again and run the car for another 3 minutes, let it cool off with the piston at BDC. Repeat 3 more times for a total of 15 minutes (five 3 minute cycles), keeping an eye on the temperature and making sure it is in the low 200° range. Now increase the run time to 4 minute intervals and close the needle valve as needed to prevent the engine from running overly rich. Vary the RPM, gradually increasing speed, and make sure that the temperature is in the low 200° F range. Run at 4 minute intervals, five cycles, for a total of 20 minutes. After this the engine is ready for race tuning.

NOTE: During the first few cycles, it is important that you use smooth throttle inputs and do not "spike" the throttle to protect the bearings.

High speed needle position when starting the engine.

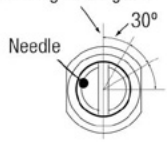

Close the high speed needle approximately 30° as needed. This procedure will be repeated several times throughout the break-in process.

NOTE: In the event that you replace any of the major engine components (piston, sleeve, con rod, crankshaft or bearings), a brief break-in should be performed. If you change to a fuel with higher nitro content, the engine will need to be re-tuned.

HOW TO STOP THE ENGINE

To stop the engine during normal operation, reduce the throttle to neutral, flip the car over and push a blunt rubber object against the flywheel. **DO NOT** use your fingers!

⚠ WARNING!

Do not touch rotating parts, the engine, or the tuned pipe; these components get extremely hot and contact with them may result in a serious burn or other injury.

FINAL ADJUSTMENT

- Final adjustment should be performed only after the break-in has been completed.

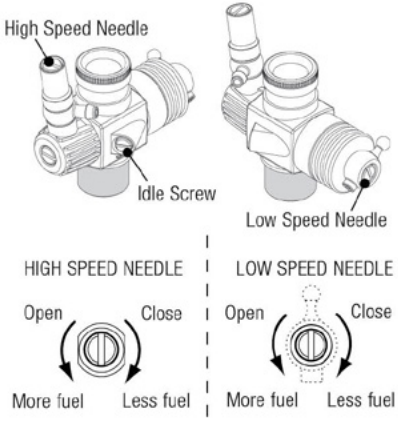

- Run the vehicle down the longest straight away at full throttle to observe the speed. Bring the car back to the starting point, close the high speed needle 30° and repeat the run, taking note of the improvement in performance.

- Continue with additional runs, gradually reducing the high speed needle setting with a goal to achieve the highest straight line speed. Remember that if the high speed needle is shut too far the engine will run lean and overheat, accompanied by visibly diminished exhaust smoke. At this point the model will begin to lose speed. If this happens, throttle down immediately, stop the vehicle and open the high speed needle 45-90°.

- With the engine running, close the throttle and allow it to idle for about five seconds and then open the throttle to the full throttle position. If, at this point, the engine puffs out excessive smoke and the vehicle does not accelerate smoothly and rapidly, it is likely that the idle mixture is too rich. In this case, turn the low speed needle clockwise 45-90°. If the engine speeds up momentarily and then cuts out abruptly when the throttle is opened, the idle mixture is too lean. Correct this by turning the low speed needle counter clockwise 45-90°.

NOTE: Low speed needle adjustments should be made in increments no more than 45-90°, carefully checking the effect on throttle response with each small adjustment.

- Carry out adjustments patiently under actual running conditions, until the engine responds quickly and positively to the throttle inputs.

⚠ WARNING!

Mixture adjustments (whether via the low speed needle, or the high speed needle), cannot be made accurately under 'no load' conditions. These adjustments are not recommended and carry's the risk of seriously damaging the engine through over revving and overheating.

- With the optimum mixture control position, light smoke is visible during high speed running and the engine RPM increases steadily during acceleration. Remember, if the engine is operated with a lean fuel/air mixture, it will overheat and run unevenly. It is advisable to set both the high speed needle and low speed needle slightly on the rich side of the best RPM setting as a safety measure.

- If the engine runs too fast with the throttle closed, the idle screw should be turned counter-clockwise to reduce the throttle opening.

- After the break in period, a leaner needle setting may be required to maintain maximum performance.

CARBURETOR CLEANLINESS

The small fuel orifices must be kept clear to ensure correct carburetor function.

- **REALIGNMENT OF THE LOW SPEED NEEDLE & MID NEEDLE**
  When making carburetor adjustments, it is possible that the low speed needle and mid needle may be inadvertently screwed in or out too far and thereby moved beyond the effective adjustment range. The basic positions can be found by rotating the low speed needle until its slotted head is flush with the ball link body.

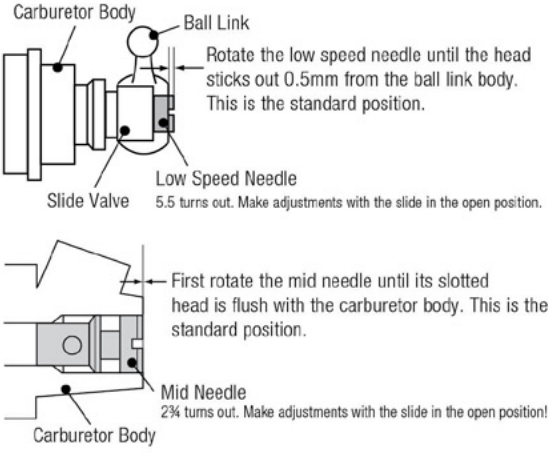

CARE & MAINTENANCE

1 The small particles of foreign matter that may be present in any fuel may obstruct fuel flow, causing erratic engine performance, unreliable operation or permanent damage to the engine. It is recommended that a high quality in-line fuel filter be installed between the fuel tank and carburetor.

2 Do not forget to clean or replace filters regularly to remove the dirt and other material that can accumulate. Additionally, the carburetor may require occasional maintenance.

3 At the end of each operating session, drain out any remaining fuel from the fuel tank. Then restart the engine to burn off any fuel that may remain inside the engine. Repeat this procedure until the engine fails to start. This should be performed while the engine is still warm.

4 Remove the glow plug and inject a small amount of after-run oil into the engine from the glow plug hole in the combustion chamber. Then turn over the engine with the starter box for 4 to 5 seconds to distribute the oil to the working parts inside the engine.

NOTE: Do not inject after run oil in through the carburetor, as this may cause the carburetor o-rings to deteriorate. These procedures will reduce the risk of starting difficulties or corrosion after a period of storage.

5 Finally, when cleaning the exterior of the engine, use an approved nitro cleaner. Do not use gasoline, kerosene, or any petroleum based chemical as this could damage engine seals and other components.

NOTE: This engine uses a silicone ramped crankshaft. **DO NOT** use light oil, water-displacing oil, kerosene, or other petroleum based oils as an after run oil or to clean the crank, as this will permanently damage the silicone. Use alcohol or nitro fuel to clean the crank.

Dirt and dust may lodge in ◯ marked places

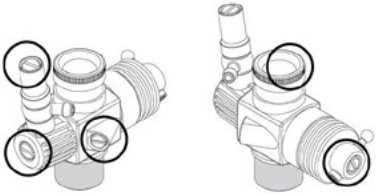

INSTALLING DUST CAPS

When storing the engine install the cap on the exhaust port, carburetor, etc. to prevent dust from entering the engine. This can cause permanent damage.

CHECKING THE ENGINE

As the engine wears, performance will decrease. It is suggested to replace parts as needed when the following symptoms are detected.

- Engine sound changes and easily overheats.
- Power has dropped.
- Idling is unstable and/or engine cuts out when idling.

In most cases, the bearings, piston & sleeve assembly, connecting rod and/or crankcase have become worn. Check the parts carefully and replace as needed.

TROUBLESHOOTING

SYMPTOM: ENGINE FAILS TO START

Cause	Corrective Action
Fuel tank is empty. Fuel not reaching the engine.	Fill the tank with fuel and repeat priming procedure.
Glow plug element is burned out. Glow plug battery discharged.	Replace glow plug. Recharge or replace the battery.
Clogged fuel filter. Air cleaner or internal silencer are dirty.	Clean or replace fuel filter. Replace air cleaner element and clean inside silencer.
Engine is over primed (flooded).	Remove glow plug and pump out excess fuel.
Fuel tubing is disconnected. Fuel tubing is kinked, split or has a hole.	Connect fuel tubing securely. Check the tubing carefully and replace if necessary.
Incorrect servo linkage.	Connect correctly after setting servo at neutral.
Reverse rotating direction of the starter box.	Make sure the starter box rotates counter clockwise as seen from crankshaft side.

TROUBLESHOOTING

SYMPTOM: ENGINE FIRES INTERMITTENTLY BUT DOES NOT RUN

Cause	Corrective Action
Insufficient fuel in the tank.	Fill the tank with fuel.
Deteriorated glow plug.	Replace glow plug.
Clogged fuel filter. Air cleaner or internal silencer are dirty.	Clean or replace fuel filter. Replace air cleaner element and clean inside silencer.
Engine is over heated.	Wait until engine is cool.
Incorrect clutch release.	Adjust the tension of the clutch spring.
Glow plug battery disconnected too soon.	Wait until RPM becomes stable before disconnecting plug battery.
Vibration causing air bubbles in fuel.	Install o-rings to the fuel tank screws to prevent bubbles.

SYMPTOM: UNSTABLE IDLE

Cause	Corrective Action
Incorrect glow plug.	Use the glow plug recommended in the instructions.
Unsuitable fuel.	Do not use extremely high nitro or low oil content fuel.
Extremely light flywheel.	Add heavier flywheel.
Silencer or manifold are not securely connected or are disconnected.	Replace seal ring. Check and secure the system.

TROUBLESHOOTING

SYMPTOM: NOT REACHING PEAK RPM

Cause	Corrective Action
Insufficient warming up or break-in.	Set the needles only after warming up. Complete the break-in process.
Silencer or manifold are not securely connected or are disconnected.	Replace gasket. Check and secure the system.
Fuel tubing from tank is split or broken.	Replace the tubing.

SYMPTOM: POOR THROTTLE RESPONSE

Cause	Corrective Action
Deteriorated glow plug.	Replace glow plug.
Incorrect carburetor settings.	Readjust low RPM range with Low Speed Needle and Mid Needle.
Incorrect Setting of transmitter Exponential function.	Check the transmitter setting.
Incorrect Linkage.	Make sure the throttle servo linkage does not bind and is connected correctly.

SYMPTOM: POOR RPM DROP

Cause	Corrective Action
Throttle position open too far.	Close Low Speed Needle to adequate position to lower idle RPM.
Carburetor not fully seated.	Install carburetor securely.
Low Speed Needle closed too far.	Open the Low Speed Needle a little.

ENGINE EXPLODED VIEW

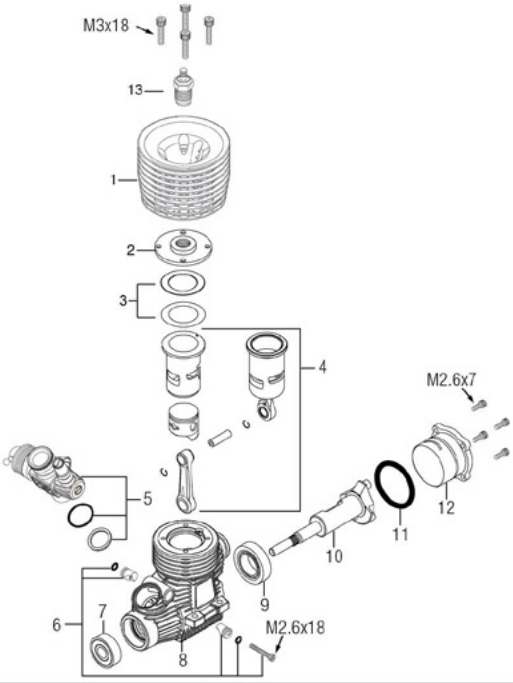

Part Number	Size	Pieces Used in an Engine
PTK-2515	2.6x7mm	Rear Cover Plate Screw - 4
PTK-2514	2.6x18mm	Carburetor Retainer Screw (Complete) - 1
PTK-H-1208	3x18mm	Cooling Head Retaining Screw - 4

No.	Part Number	Description
1	PTK-2501	Cooling Head
2	PTK-2508	Turbo Plug Button Head
3	PTK-2509	0.1mm & 0.2mm Head Gasket/Shim Set
4	PTK-2507	Complete Piston/Sleeve/Rod Assembly
5	PTK-2503	Complete Carburetor
6	PTK-2514	Carburetor Retainer Assembly
7	PTK-2504	7x19x6mm Front Engine Bearing
8	PTK-2502	Crankcase
9	PTK-2505	14x25.4x6mm Ceramic Rear Bearing
10	PTK-2506	Crankshaft
11	PTK-2512	Rear Cover Plate O-Ring
12	PTK-2511	Rear Cover Plate
13	PTK-2542	P3 Turbo Glow Plug (Ultra Hot)

* Specifications are subject to change without notice.
* See additional option parts on Pg.33

CARBURETOR EXPLODED VIEW

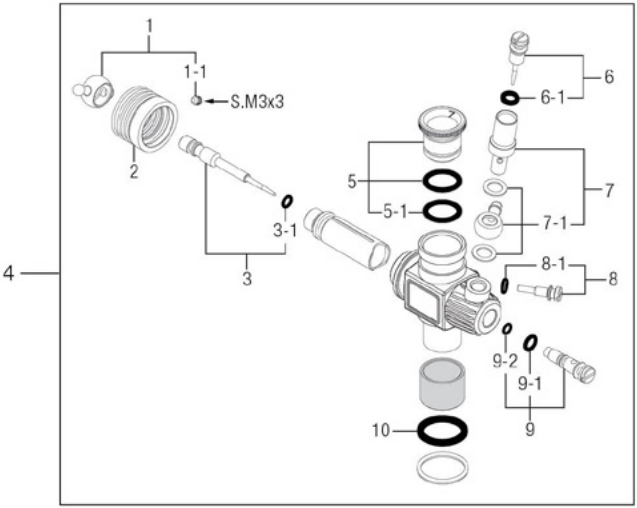

No.	Part Number	Description
1	PTK-2529	Ball Link
1-1	PTK-H-4000	3x3mm Set Screw
2	PTK-2535	Carburetor Boot
3	PTK-2530	Low Speed Needle
3-1	PTK-2531	Low Speed Needle O-Ring
4	PTK-2503	Slide Valve (Carburetor Complete)
5	PTK-2524	Carburetor Restrictor – 7mm "Elliptical"
5	PTK-2526	Carburetor Restrictor – 8mm "Elliptical"
5-1	PTK-2517	Carburetor Restrictor O-Ring
6	PTK-2540	High Speed Needle
6-1	PTK-2541	High Speed Needle O-Ring
7	PTK-2537	High Speed Needle Housing
7-1	PTK-2538	Fuel Inlet with Gasket
8	PTK-2543	Idle Screw
8-1	PTK-2536	Idle Screw O-Ring
9	PTK-2532	Mid Rangle Needle
9-1	PTK-2533	Mid Range Needle O-Ring Large (2)
9-2	PTK-2534	Mid Range Needle O-Ring Small (2)
10	PTK-2513	Carburetor Outer O-Ring

* Specifications are subject to change without notice.

ENGINE ACCESSORIES

Part Number	Description
PTK-2542	P3 Turbo Glow Plug (Ultra Hot)
PTK-2060-1	PTK-2060 Tuned Pipe (No Manifold) (Welded Nipple)
PTK-2060	PTK-2060 Tuned Pipe w/Manifold (Welded Nipple)
PTK-2544	Off-Road Exhaust Manifold (for PTK-2060)
PTK-2090-1	PTK-2090 Tuned Pipe (No Manifold) (Welded Nipple)
PTK-2090	PTK-2090 Tuned Pipe w/Manifold (Welded Nipple)
PTK-2545	Off-Road Exhaust Manifold (for PTK-2090)
PTK-2516	6mm Aluminum Carburetor Restrictor
PTK-2518	6.5mm Aluminum Carburetor Restrictor
PTK-2519	7mm Aluminum Carburetor Restrictor
PTK-2520	7.5mm Aluminum Carburetor Restrictor
PTK-2521	8mm Aluminum Carburetor Restrictor
PTK-2522	6mm Aluminum "Elliptical" Carburetor Restrictor
PTK-2523	6.5mm Aluminum "Elliptical" Carburetor Restrictor
PTK-2524	7mm Aluminum "Elliptical" Carburetor Restrictor
PTK-2525	7.5mm Aluminum "Elliptical" Carburetor Restrictor
PTk-2526	8mm Aluminum "Elliptical" Carburetor Restrictor

* Specifications are subject to change without notice.

3D DRAWING & SPECIFICATIONS

Displacement	3.46cc (0.211cu.in.)
Bore	16.6mm (0.654in.)
Stroke	16.0mm (0.630in.)
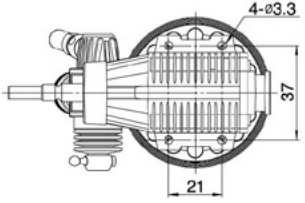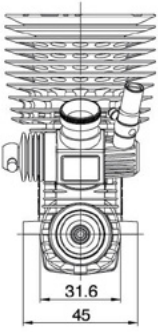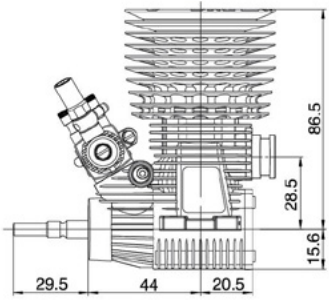
Practical R.P.M.	3,000 - 40,000 R.P.M.
Power Output	2.5ps / 34,000 R.P.M.
Weight	355g (12.52oz)