Super Dual Linear Voltage Regulator

PTK-4000

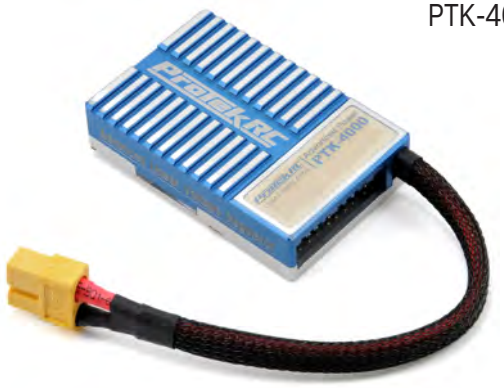

The ProTek R/C Dual Power Bus Advanced Linear Voltage Regulator is a highly efficient regulator manufactured with the highest end-grade components. It offers high current handling capacity, extremely stable and adjustable dual output voltage, and features a large heatsink. The ProTek R/C Dual Power Bus regulator will satisfy the needs of the most demanding pilots.

• Specifications:

Input Voltage:
6 - 10V (5 - 8 cell NiCd/NiMH, 2 cell LiPo/LiFe)

Output Voltage:
Servo: 5.2V/6.0V/6.8V/7.4V/8.4V (Bypass)
Receiver: 5.2V/6.0V/6.8V/7.4V/8.4V (Bypass)

Output Current:
Servo Channel: 8A (Max 12A @ 5.2V - 6.0V)
Servo Channel: 10A-15A (Max 20A @ 6.8V-7.4V)
Receiver Channel: 8A (Max 12A @ 5.2V - 6.0V)
Receiver Channel: 10A - 15A (Max 20A @ 7.4V)

Low Voltage Alarm Setup:
LiFe type (6.5V); LiPo type (7.3V)

Switch Type Fail Safe:
Push button type with LED/Display board

Power Connector Type: XT60 connector
Size (WxLxH): 60.5x39.6x14.8mm
Weight: 56.6g

Includes:
(1) ProTek R/C Dual Power Bus Advanced Linear Voltage Regulator
(1) Switchboard with LED/Display
(4) Receiver Cables

• Features:

1. A dual linear regulator designed to prevent switching noises and voltage ripples that are associated with switch type regulators. It provides superior voltage and current stability, and transient response against load variation.
2. Separate noise filtered, adjustable output voltages for CCPM channels and receiver are adjustable from 5.4V to 8.4V allowing optimum servo performance and safe combined use of high voltage CCPM servos and low voltage tail servos.
3. Voltages are easily adjustable using DIP switches for both cyclic servos and receiver channels allowing accurate, easy and quick setting of the voltages without the need for an additional device to measure the voltage.
4. Voltage stability for 7.4V HV servos. When the output voltage is set to 7.4V or 8.4V (bypass), the regulator uses its buffer function and capacitor circuit to deliver more stable power with less transient response than can be achieved with a direct 7.4V battery.
5. Low voltage alarm circuit which can be set from 7.3V to 6.5V, or disarmed. The alarm circuit will operate when the battery voltage falls below the voltage threshold set for the low voltage alarm. Both the LOW/BATT LED display (display on middle case) and the buzzer on the main unit are simultaneously active. The external switch board has a 1W high luminance LED that will flash when the low voltage point is reached and is easily visible in flight, even during the day.
6. Regulator bypass. In the event the battery voltage is lower than the desired set voltage, the regulator will bypass itself to prevent an accident caused by system shutdown from a low voltage condition.
7. Modular design. All cables, switches and LED unit are manufactured so they can be extended, removed or replaced depending on the user's needs.
8. Large efficient heatsink allows it to be safely mounted and operated in areas with minimum air flow.
9. Works well with all radio systems including PPM, PCM and 2.4GHz.

• How to Install and Use:

The regulator default switch settings are in regulator bypass mode for both banks. Please set the regulator outputs to safe operating voltage levels for your receiver and servos **BEFORE** wiring the regulator into your aircraft! Failure to do so could result is possible damage to your lower voltage components!

1. Set the desired output voltage of receiver:

The Receiver Voltage is set with switch numbers 7-8-9-10 on the far right side of the DIP switch bank located on the back of the regulator. There is a single switch for each voltage, 5.2V, 6.0V, 6.8V and 7.4V. Simply turn on the one switch that corresponds with the voltage you want the receiver to operate on. The switch bank is numbered from left to right 1-10. (Please ignore the 1-4 labels on the switch itself). Remember, all servos directly connected to the receiver, IE: rudder or throttle will run on the voltage you have selected for the receiver.

Note: If switches 7-8-9-10 are all turned to off, the receiver output voltage is 8.4V (regulator bypass).

2. Set the desired output voltage of cyclic servo channels:

The Cyclic Servo Output Voltage is set with switch numbers 1-2-3-4 on the far left side of the DIP switch bank located on the back of the regulator. Again there is a single switch for each voltage, 5.2V, 6.0V, 6.8V and 7.4V. Locate and turn on the one switch that corresponds with the voltage you want the cyclic servos to operate on.

Note: If switches 1-2-3-4 are all turned to off, the cyclic servo output voltage is 8.4V (regulator bypass).

Examples:

To operate your cyclic servos on 7.4V and your receiver on 5.2V, turn switch 4 on the left side of the DIP switches to **ON** and turn switch 7 to **ON**.

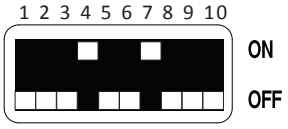

If you wish to operate your cyclic servos on 7.4V and your receiver on 6.0V, turn switch 4 on the left side of the DIP switches to **ON** and turn switch 8 to **ON**.

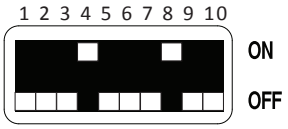

To operate your cyclic servos on 6.0V and your receiver on 5.2V, turn switch 2 on the left side of the DIP switches to **ON** and turn switch 7 to **ON**.

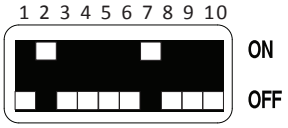

3. Setup the low voltage alarm:

Set the low voltage alarm to match the type of battery installed. Use DIP switches number 5 and 6 located on the back of the regulator. The recommended voltages are 7.3V for LiPo batteries (switch 6 on) or 6.5V for LiFe batteries (switch 5 on). If both switches 5 and 6 are turned off, the low voltage function will be disabled.

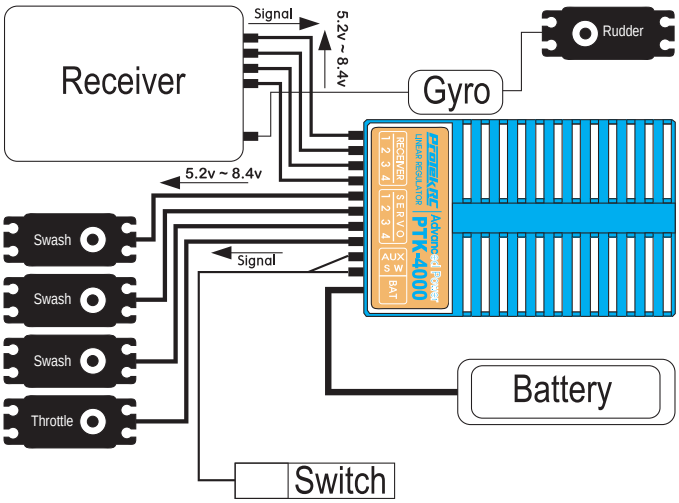

Note: - A well charged battery should not drop the voltage down to the alarm voltage at normal servo load when operating above 68°F ambient temperature (20°C). If the low voltage alarm is triggered during flight and the battery voltage is within an acceptable range, the condition of the battery and wiring should be inspected. In cold conditions, the possibility of a voltage drop is greater, and may trigger the low voltage threshold more frequently. A high discharge rate, large capacity battery is recommended for flight in these conditions. Additionally, it is recommended that the low voltage threshold is set to 6.5V in cold weather conditions.

The standard low voltage value for LiPo is 7.2 to 7.3V, and is 6.4 to 6.5V for LiFe with a range of approx 0.1V. The voltage threshold that the low voltage alarm will react at is slightly different due to the tolerances of each individual regulator. The user should check the voltage of the battery when the alarm occurs to verify that the low voltage range is correct.

If the servo is moved manually when the power is off it will trigger the low voltage alarm. This is not a flaw, but is a status of the reverse electromotive force when the power generated by the servo motor is reverse supplied to the regulator. Also, if a transmitter antenna or oscillator is near the low voltage alarm circuit, the low voltage alarm could be triggered due to the strong electromagnetic field. This is not an error and should not cause concern.

4. Switch connection:

The Fail-Safe-On push button switch contains the low voltage LED/DISPLAY. Connect the three wire cable to the SW port on the main unit. The blue wire of the LED/DISPLAY cable is the low voltage alarm and is connected to the AUX port on the regulator. Be aware that the +/- terminals of the AUX terminal have the same voltage that the cyclic servo channels are set for, 5.2V, 6.0V, 6.8V and 7.4V.

Note: The push button switch consumes a small amount of current when the unit is powered off. It is recommended that you unplug your batteries after use.